Electrolux

4L Digital Air Fryer

SDA2982

User Manual

Electrolux

Contents

Page No.	
2	Contents
3-6	Important Safety Instructions
7	Additional Safety Information
8	Explanation of Symbols
9	What's in the Box
9	Introduction
10	Description of Parts
11	Description of Control Panel
11	Before First Use of Your Air Fryer
12-13	Attaching and Removing the Drawer Handle
14	Setting Up Your Air Fryer
15	Cooking with Your Air Fryer
15-16	Setting the Cooking Temperature/Time
16-17	Using the Cooking Presets
18	Approximate Cooking Timings, Temperatures
19	Cleaning & Maintenance
19	Mains Plug Information
19	Technical Specification
20	Recycling Information
21	Customer Support
22	Troubleshooting
23	FSC and Safety Marks
24-25	Notes
Back Page	Warranty Information

Before using this product, please read through this manual carefully paying particular attention to the safety instructions. Failure to do so may result in personal injury or damage to the product.
Carefully save this instruction manual for future reference. Ensure the user manual is included when passing the product on to any third parties.

IMPORTANT SAFETY INSTRUCTIONS FOR PROPER USE

Whilst using electrical appliances, basic safety precautions should always be followed.
Only use the product as described in this user manual. Any other use is considered improper and may result in damage to property or persons.
The manufacturer or vendor cannot be held liable for damages or injury incurred through improper or incorrect use.

- **Read and familiarise yourself with all operating instructions before using this Air Fryer.**
- Before plugging your unit into the mains, visually check that it is intact and has not suffered any transit damage.
- Check that the voltage indicated on the data plate corresponds with that of the local network before connecting the appliance to the mains power supply.
- **DO NOT** use this product with a programmer, timer, separate remote-control system or any other such device.
- **DO NOT** immerse this appliance in water or any other liquids.

Important Safety Instructions

- Cooking appliances should be positioned in a stable situation with the handles (if any) positioned to avoid spillage of liquids.
- **DO NOT** touch hot surfaces. Accessible surfaces are liable to get hot during use. Always use the handles provided.
- Oven gloves should be used whilst using this appliance.
- Close supervision is required when using this appliance near children.
- Never leave this appliance within reach of children.
- This appliance shall not be used by children from 0 to 8 years.
- This appliance can be used by children aged from 8 years and above and persons with reduced physical, sensory or mental capabilities or lack of experience and knowledge if they have been given supervision or instruction concerning use of the appliance in a safe way and understand the hazards involved.
- Children shall not play with the appliance.
- Keep the appliance and its cord out of reach of children less than 8 years.
- Cleaning and user maintenance shall not be made by children.
- **DO NOT** leave the appliance unattended during use.
- **DO NOT** leave the appliance unattended whilst connected to the mains supply.
- Always use this appliance on a solid, level, non-flammable surface.
- **DO NOT** use this appliance outdoors.
- It is imperative to unplug the power cord after the appliance has been used, before it is cleaned and whilst being repaired.

Important Safety Instructions

- Regular, periodic checks should be carried out on the supply cord to ensure no damage is evident. Should there be any signs of damage the appliance should not be used.
- If the supply cord is damaged it is to be replaced by a qualified person in order to avoid a hazard.
- **DO NOT** operate this appliance with a damaged plug or cord, after a malfunction or after being dropped or damaged in any way.
- **DO NOT** allow the mains cable to hang over sharp edges or come in contact with hot surfaces.
- Allow the unit to cool before storage.
- Never place the appliance near to flammable material or high-pressure containers.
- This appliance is intended for household use only and should not be used for industrial purposes.
- **DO NOT** use any accessories or attachments with this appliance other than those supplied or recommended by the supplier.
- **DO NOT** use this appliance for anything other than its intended use.
- **DO NOT** push objects into any openings as damage to the appliance and/or electric shock may occur.
- Ensure appliance is situated in an open area, do not allow it to come in contact with cupboards, curtains, wall coverings, clothing or other flammable materials.
- Unplug after each use. Grasp the plug, not the cord.
- **DO NOT** cover this appliance.
- Never place this appliance on an electric, gas, or any other type of hob.

Important Safety Instructions

WARNING! Do not attempt to move the air fryer whilst it is hot or contains hot food or liquids. Turn the appliance off and disconnect from the mains and let it cool sufficiently before moving it.

WARNING! Hot steam may be released when opening and closing the appliance during use. Risk of scalding!

WARNING! Always carry the appliance with both hands. Always use oven gloves. Burn hazard!

THIS APPLIANCE MUST BE EARTHED

Additional Safety Information

- **PLEASE NOTE:** Before use, ensure that the Air Fryer is used in an open, well-ventilated area well away from other appliances and other obstructions.
- **Do not** use the Air Fryer in front of, near or below combustible materials such as plastics, curtains or cupboards, etc.
- **Do not** place the appliance against a wall or against other appliances. Leave at least 10cm minimum free space on the back and sides and 10cm minimum free space above the appliance.
- **Do not** place anything on top of the appliance.

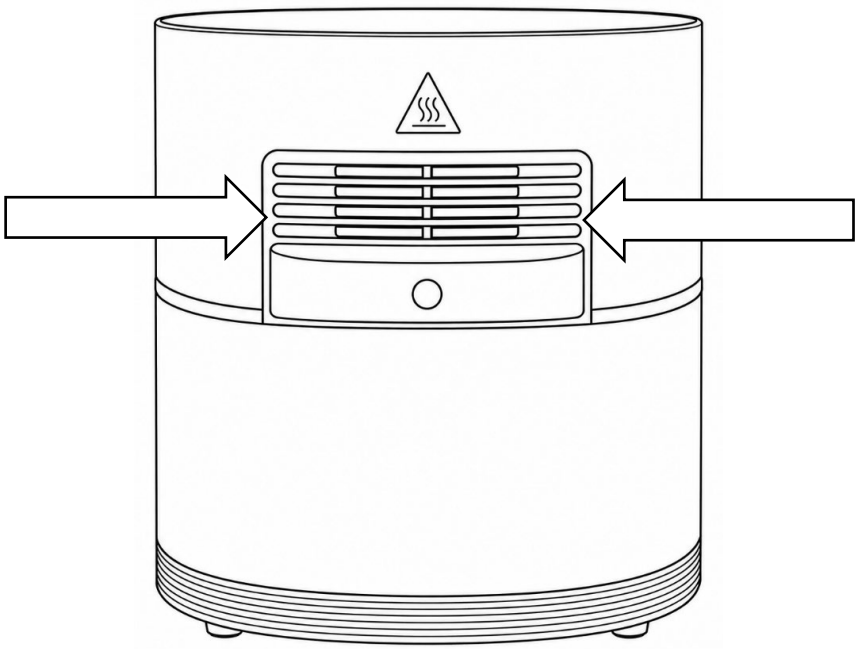

The diagram above shows the rear of the air fryer and the air vent outlets highlighted by the arrows.

Keep this area free and clear from obstructions as directed above.

Explanation of Symbols

The following warning symbols or words are used in this instruction manual:

UK CA	Products labelled with UK Conformity Assessment identifies products conforming to UK statutory requirements
CE	Products labelled with this symbol conform to applicable provisions of the European Economic Area.
	You should now recycle your waste electrical goods and in doing so help the environment. This symbol means waste electrical products at the end of their useful life should not be disposed of with normal household waste and not sent to landfill. Please ensure it is taken to a suitable facility for disposal. Check with your Local Authority or retailer for recycling advice or visit www.recycle-more.co.uk or www.weeeireland.ie enter your postcode to find out your nearest recycling site.
~	This symbol indicates that the supply uses an alternating current mains supply.
WARNING!	This designates a hazard with moderate risk, which may result in severe injury or damage to the product if not adhered to.
	This product is class 1 and must be Earthed.
	This symbol indicates that the surface gets hot and care must be taken.

What's in the Box

- Air Fryer
- Drawer Handle
- Trivet
- Instruction Manual (This Booklet)

Introduction

This household Air Fryer cooks using very little or no cooking oil for healthier cooking.
If a little oil is required for extra browning for example, use a moderate amount of spray type cooking oil.

WARNING! DO NOT fill your Air Fryer with cooking oil as this will cause a fire and scalding hazard.
DO NOT fill your Air Fryer with water as this will cause a scalding hazard.
DO NOT use metal cooking tools with this Air Fryer as damage may occur to the non-stick coating. Only use wooden or plastic (nylon) tools with your Air Fryer.

Description of Parts

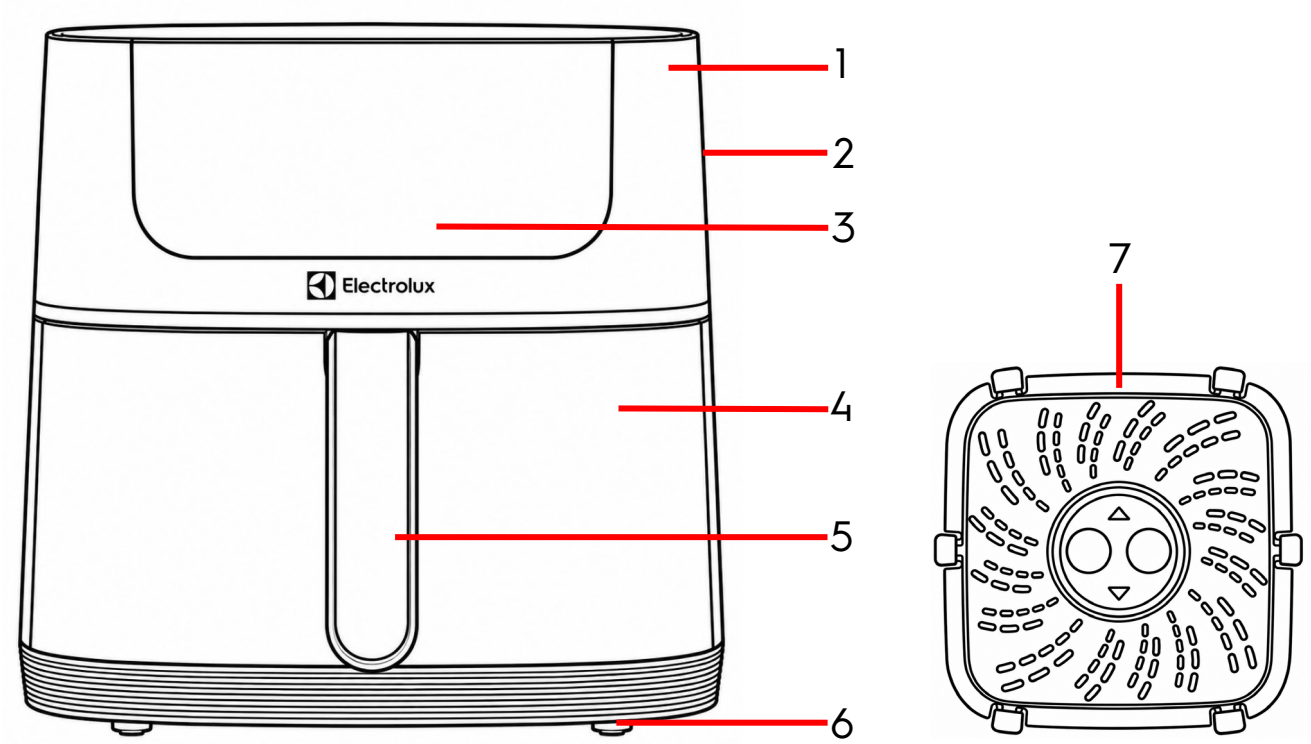

1. Air Fryer
2. Air Outlet (rear)
3. Control Panel
4. Drawer
5. Drawer Handle
6. Non-slip feet
7. Trivet

Description of Control Panel

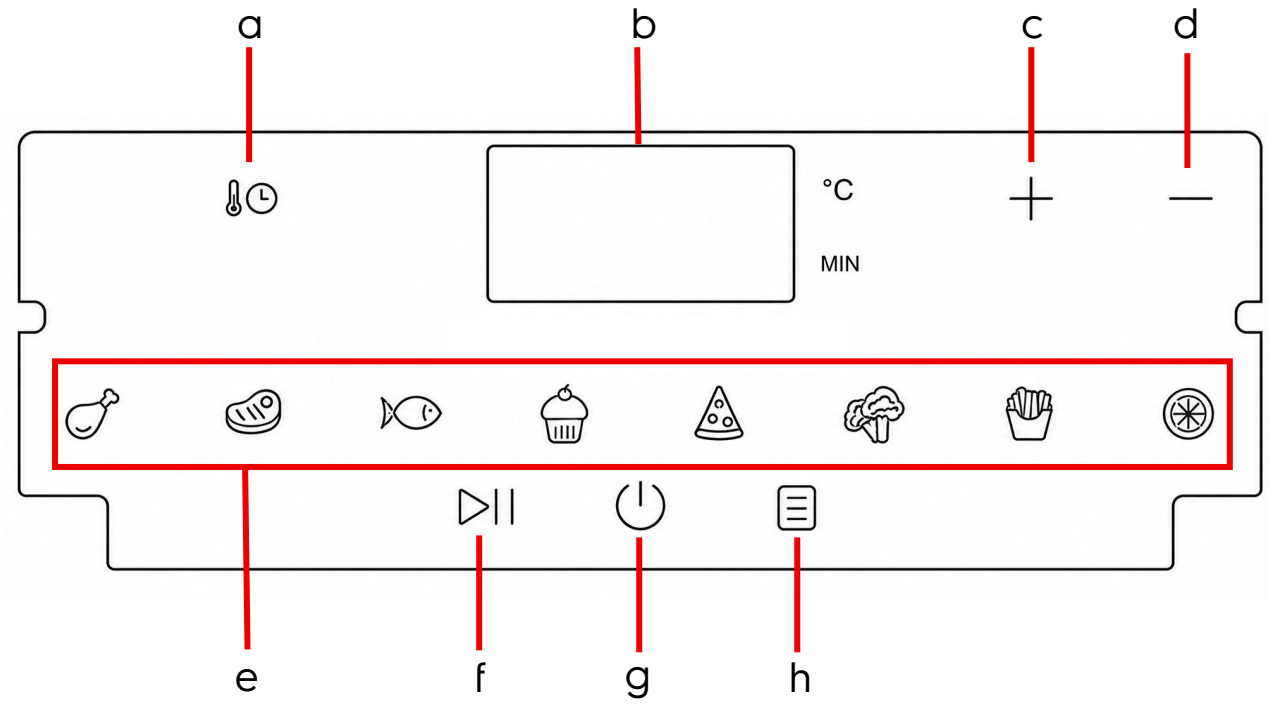

a. Temp/Time
b. Digital Display
c. Increase
d. Decrease
e. Cooking Presets
f. Start/Pause
g. Power On/Off
h. Menu

Before First Use of Your Air Fryer

- Before use, retain all packaging until all the parts are present against the parts list – see Description of Parts above.
- Check that there is no damage to the mains cable or product.
- Take care whilst opening the carton as a sharp blade may damage the product.
- Ensure that you clean your Air Fryer before first and every use with a damp cloth and dry thoroughly.
- Wash the **Trivet** (7) in warm, soapy water and then rinse and dry thoroughly.
- Whilst using your Air Fryer for the first time, you may notice a little smoke and odour; this is normal and is simply grease used during manufacture and will soon pass.

Attaching and Removing the Drawer Handle

The **Drawer Handle** (5) will be supplied detached from the **Drawer** (4) for transportation.

Attaching the Drawer Handle

1. Remove all packaging materials and any protective labels from the **Drawer Handle** (5) and **Drawer** (4).

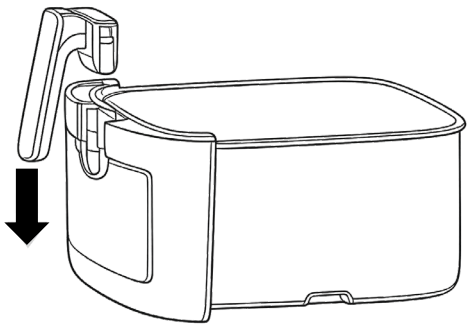

2. Remove the **Drawer** (4) from the **Air Fryer** (1) by pulling it out fully.

3. Align the **Drawer Handle** (5) with the attachment points on the front of the **Drawer** (4).

4. Slide the **Drawer Handle** (5) downward onto the **Drawer** (4) until it clicks securely into position.

5. Gently pull the **Drawer Handle** (5) to ensure it is correctly locked in place.

NB The **Drawer Handle** (5) must be securely attached before using the appliance.

WARNING! Never use the **Drawer Handle** (5) to lift or carry the entire **Air Fryer** (1). The **Drawer Handle** (5) is intended only for removing and inserting the **Drawer** (4).

Removing the Drawer Handle

If required for cleaning or storage, the **Drawer Handle** (5) can be removed from the **Drawer** (4).

1. Ensure the **Air Fryer** (1) is switched off, unplugged from the mains supply and completely cool before removing the **Drawer Handle** (5).

2. Remove the **Drawer** (4) from the **Air Fryer** (1).

Attaching and Removing the Drawer Handle

3. Insert a suitable tool, such as a small screwdriver, into the release opening located on the handle attachment point.

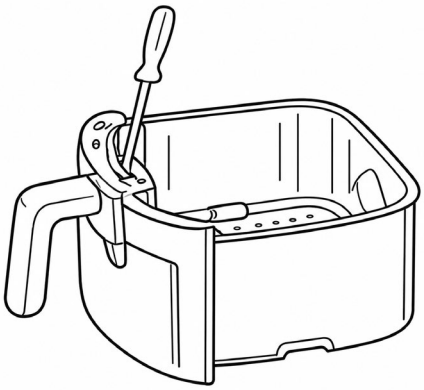

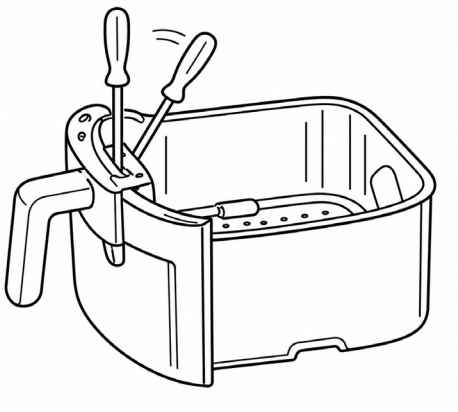

4. Press the release mechanism inward whilst gently pulling the **Drawer Handle** (5) away from the **Drawer** (4).

5. Continue pulling the **Drawer Handle** (5) and lift upwards until it disengages completely from the **Drawer** (4).

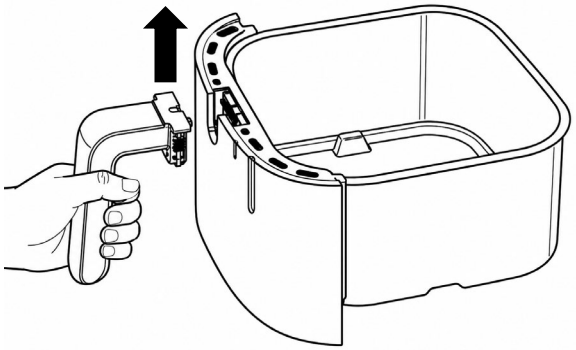

NB Do not force the **Drawer Handle** (5). If resistance is encountered, ensure the release mechanism is fully depressed before attempting to remove the handle.

WARNING! Take care when using tools to release the **Drawer Handle** (5) to avoid injury or damage to the appliance.

Setting Up Your Air Fryer

1. Place the Air Fryer (1) on a solid, level, heat resistant surface clear of all obstructions as described above.

2. Remove the **Drawer** (4) from the **Air Fryer** (1) by pulling it by the **Drawer Handle** (5).

3. Ensure that the **Trivet** (7) is placed in the bottom of the **Drawer** (4) as shown to the right.

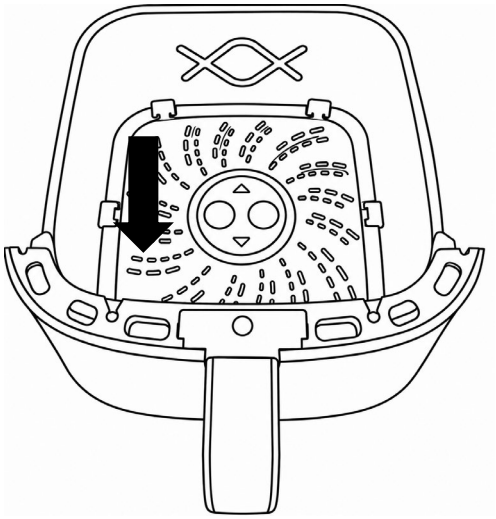

4. Ensure that the silicone feet are fitted to the **Trivet** (7) before inserting it into the bottom of the **Drawer** (4). The silicone feet help to hold the **Trivet** (7) in place and prevent scratching of the **Drawer** (4) non-stick surface.

NB The **Trivet** (7) must be fitted to the base of the **Drawer** (4) as this lifts the food clear of the base and provides good air circulation around the food for efficient cooking.

5. Replace the **Drawer** (4) into the **Air Fryer** (1) ensuring that it is pushed fully home.

NB The **Air Fryer** (1) will not function if the **Drawer** (4) is not placed fully into the **Air Fryer** (1).

WARNING! Take care whilst handling the **Drawer** (4) and **Trivet** (7), the use of oven gloves is recommended.

Cooking With Your Air Fryer

1. Carefully remove the **Drawer** (4) from the **Air Fryer** (1) using the **Drawer Handle** (5). Ensure that the **Trivet** (7) is placed in the bottom of the **Drawer** (4) as described above.

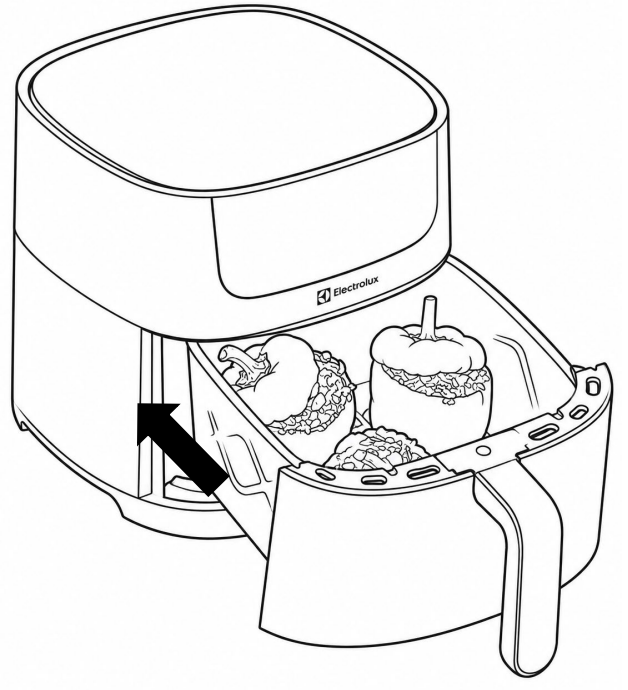

2. Place the food to be cooked into the **Drawer** (4) ensuring that there is adequate room left for the air to circulate. Do not fill to the brim. Insert the **Drawer** (4) back into the air fryer ensuring that it is pushed fully home.

3. Insert the mains plug into the nearest socket.

4. Press the **Power On/Off** (g) to power the unit up. The **Control Panel** (3) will illuminate.

Selecting the Cooking Temperature/Time

1. Press the **Temp/Time** (a) icon, the **Digital Display** (b) will flash the current set temperature. Press the **Increase** (c) or **Decrease** (d) icons to set the desired cooking temperature in 5°C intervals (80°C - 200°C).

2. Press the **Temp/Time** (a) icon again, the **Digital Display** (b) will flash the current set cooking time. Press the **Increase** (c) or **Decrease** (d) icons to set the desired cooking time in 1-minute intervals (up to 60 minutes).

3. Once the cooking time and temperature has been set, press the **Start/Pause** (f) icon to begin cooking. Press the icon again to pause cooking.

NB If the **Drawer** (4) is removed during cooking, the **Air Fryer** (1) will pause and will restart once the **Drawer** (4) is replaced.
NB During cooking, the **Digital Display** (b) will alternate between the cooking time and temperature.

4. At the end of the cooking time, the **Air Fryer** (1) will beep five times and stop heating. The fan will continue running for 20 seconds to cool the unit down, this is normal.

Selecting the Cooking Temperature/Time

5. Remove the **Drawer** (4) from the **Air Fryer** (1) and serve. Ensure the **Drawer** (4) is placed on a heat proof surface during serving.

NB The 'shake' indicator will illuminate when the cooking cycle has reached its halfway point. This gives you the opportunity to shake or flip your food in appliance, which helps ensure even cooking.

NB To shake the drawer, remove it fully from the air fryer and shake it, also do not bang the drawer down on a hard surface as this may damage your air fryer.

NB Cooking can be stopped at any time pressing either the **Start/Pause** (f) icon or the **Power On/Off** (g) icon.

NB DO NOT use metal cooking tools with this Air Fryer as damage may occur to the non-stick coating. Only use wooden or plastic (nylon) tools with your Air Fryer.

Using the Cooking Presets

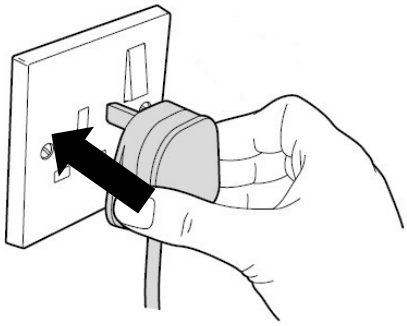

1. Insert the mains plug into the nearest socket.

2. Press the **Power On/Off** (g) to power the unit up. The **Control Panel** (3) will illuminate.

3. This Air Fryer comes with 8 preset cooking settings for the most common food types. The table below shows the default time and temperature settings for the preset programmes.

4. Press the **Menu** (h) icon to select the desired cooking preset, the corresponding icon on the **Control Panel** (3) will flash.

5. Once the desired cooking preset has been selected, press the **Start/Pause** (f) icon to begin cooking. Press again to pause cooking.

6. Alternatively, the preset cooking programme can be overridden by pressing the **Temp/Time** icon (a) and then use the **Increase** (c) and **Decrease** (d) icons to adjust the temperature and time.

7. At the end of the cooking time, the **Air Fryer** (1) will beep five times and stop heating. The fan will continue running for 20 seconds to cool the unit down, this is normal.

Using the Cooking Presets

NB The 'shake' indicator will illuminate when the cooking cycle has reached its halfway point. This gives you the opportunity to shake or flip your food in appliance, which helps ensure even cooking.

NB To shake the drawer, remove it fully from the air fryer and shake it, also do not bang the drawer down on a hard surface as this may damage your air fryer.

NB Cooking can be stopped at any time pressing either the **Start/Pause** (f) icon or the **Power On/Off** (g) icon.

Preset Cooking Chart

Air Fry Menu	Temperature	Time	Temperature Range	Time Range	Shake indicator
Default	185°C	15 mins	80°C - 200°C	0-60 mins	Shake
Chicken	200°C	23 mins	80°C - 200°C	0-60 mins	Shake
Steak	200°C	12 mins	80°C - 200°C	0-60 mins	Shake
Fish	195°C	10 mins	80°C - 200°C	0-60 mins	-
Bake	160°C	30 mins	80°C - 200°C	0-60 mins	-
Pizza	185°C	8 mins	80°C - 200°C	0-60 mins	-
Vegetables	180°C	6 mins	80°C - 200°C	0-60 mins	-
Fries	200°C	23 mins	80°C - 200°C	0-60 mins	Shake
Dried Fruit	60°C	5 hours	40°C - 100°C	1hr – 24hr	-

NB Cooking times will vary according to size weight and personal preference.
Always check the internal temperature of meats before eating.
Ensure foods are thoroughly defrosted before cooking, ensure food is thoroughly cooked through before eating.

Approximate Cooking Timings, Temperatures

Food Product	Min-Max Amount (g)	Time (min)	Temperature (C)	Shake/ Turn	Additional Information
Chips & Potatoes					
Thin Frozen Chips	200-400	15-20	200	Shake	
Thick Frozen Chips	200-400	20	200	Shake	
Home-made Chips (8x8mm)	200-350	18-25	180	Shake	Add ½ tbsp. of oil
Home-made Potato Wedges	200-350	18-22	180	Shake	Add ½ tbsp. of oil
Home-made Potato Cubes	200-400	12-18	180	Shake	Add ½ tbsp. of oil
Rosti	200	15-18	180	Turn	
Potato Gratin	500	18-22	180		
Meat & Poultry					
Steak	100-300	8-14	180	Turn	
Pork Chops	100-300	10-14	180	Turn	
Hamburger	100-300	7-14	180	Turn	
Sausage Roll	100-300	13-15	180	Turn	
Chicken Drumsticks	100-400	18-22	180	Turn	
Chicken Breast	100-400	10-15	180	Turn	
Frozen Chicken Nuggets	100-300	6-10	200	Shake	Use oven ready
Snacks					
Spring Rolls	100-300	8-10	200	Shake	Use oven ready
Stuffed Vegetables	100-300	10	160	Turn	
Frozen Breadcrumbed Cheese Snacks	100-300	8-10	180	Turn	Use oven ready
Fish					
Frozen Fish Fingers	100-300	6-10	200	Turn	Use oven ready

Cleaning & Maintenance

- Always unplug the **Air Fryer** (1) from the mains supply and allow to cool before cleaning.
- **DO NOT** clean any part of the **Air Fryer** (1) in a dishwasher – **NOT** dishwasher safe.
- **DO NOT** submerge any part of the main body, the mains cable or mains plug in water or any other liquids.
- Wipe excess oil from the **Drawer** (4) and **Trivet** (7) with kitchen roll or similar.
- Wipe the main body of the **Air Fryer** (1) clean using a soft, damp cloth.
- The **Drawer** (4) and **Trivet** (7) can be washed in warm soapy water, rinse and dry thoroughly before reusing.
- **DO NOT** immerse the drawer fully into water.
- Remove the silicone feet from the **Trivet** (7) before washing so they do not get lost. Replace the silicone feet after drying the **Trivet** (7).
- Never clean any part of the Air Fryer with harsh or abrasive cleaners.
- After cleaning, allow the product to thoroughly dry before re-use.

Mains Plug Information

If your appliance is supplied with a non-rewireable plug fitted to the mains lead and should the fuse needed replacing, you must use an ASTA approved one (conforming to BS 1362 of the same rating). Never use a plug with the fuse cover missing. If in doubt, consult a qualified electrician.
If you need to remove the plug -**DISCONNECT FROM THE MAINS**- and then cut it off the mains lead and immediately dispose of it safely. Never attempt to reuse the plug or insert it into a socket outlet as there is a danger of electric shock.

Technical Specification

Model Number	SDA2982
Rated Voltage	220-240V~ 50Hz-60Hz
Rated Power	1350W
Protection Class	I (This Appliance Must Be Earthed)
ErP: Power consumption of equipment in off mode shall not exceed 0,50W	0,437W
This equipment complies with Annex III of Commission Regulation (EU) 2023/826	

Electrolux

Recycling Information

Disposal of the Packaging

Dispose of paper and cardboard in appropriate paper re-cycling facilities. Dispose of recyclable plastics in appropriate plastic re-cycling facilities. Dispose of non-recyclable plastics in the appropriate plastics collection service.

Disposal of the Product

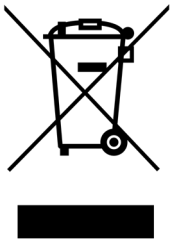

You should now recycle your waste electrical goods and in doing so help the environment. This symbol means waste electrical products at the end of their useful life should not be disposed of with normal household waste and not sent to landfill. Please ensure it is taken to a suitable facility for disposal. Check with your Local Authority or retailer for recycling advice or visit www.recycle-more.co.uk or www.weeeireland.ie enter your postcode to find out your nearest recycling site.

Customer Support

Should you require any product information, replacement parts or accessories, please contact our customer care team on 0161 831 7879 (8.30am-4.30pm Monday to Thursday, 8.00am-4.00pm Friday) and select option 3 or by contacting us via email: help@electroluxsmalldomesticappliance.co.uk

- Replacement parts and accessories are guaranteed for 1 year from the date of purchase.

- It is important to note that your warranty becomes invalid should non Electrolux parts or accessories be used with this appliance.

Troubleshooting

Problem	Possible Cause	Possible Fix
Food is Overcooked/Burnt	Cooking Temperature is set too high.	Check cooking temperature and adjust the Temperature accordingly.
	Cooking time is too long.	Check cooking time and reduce the cooking time on the Time accordingly.
Food is undercooked.	Cooking Temperature is set too low.	Check cooking temperature and adjust the Temperature accordingly.
	Cooking time is too short.	Check cooking time and increase the cooking time accordingly.
	The Drawer (4) has been overfilled.	Ensure that the Drawer (4) is not filled to the brim please leave a 3-4cm area free for the air to circulate.
	The Trivet (7) has not been fitted to the base of the Drawer (4) reducing air flow.	Ensure the Trivet (7) is inserted in the base of the Drawer (4)
Unit does not power up	No power to the Air Fryer.	Check that the mains plug is inserted into the socket and the socket is switched on (if applicable).
	The Drawer (4) is not inserted or not pushed fully home	Ensure the Drawer (4) is inserted and pushed fully home.
Burning smell from unit	Food trapped under Trivet (7).	Ensure Drawer (4) and Trivet (7) are clean.
	Previous food remains on Drawer (4) and or Trivet (7).	

FSC and Safety Marks

Insert FSC Logo Here

Notes

Notes

Electrolux

WARRANTY

Thank you for purchasing your Electrolux Product.
As part of our commitment to quality, we are offering you an extra 4 years warranty in addition to your 1 year guarantee

Your Electrolux product is guaranteed for 1 year from the date of original purchase, with proof of purchase or receipt. If any defect should occur due to faulty workmanship or material, your faulty product should be returned to the place of purchase, replacement or refund is at the discretion of the retailer.

The guarantee is subject to the following provisions:

- The product must be correctly installed and operated in accordance with the requirements contained in the instruction manual.
- The product must be used solely for domestic purposes.
- It does not cover general wear and tear, damage, misuse or any consumable parts.
- The guarantee will be rendered invalid if the product is re-sold or has been damaged through inexpert repair.
- The guarantee is only valid within the UK and Eire.

Your standard 1 year guarantee will only be extended to the maximum available for your individual product upon registration. (Note: products must be registered individually and covers the main body and housing). If you do not register your product within 28 days of the original purchase date, your product will only be guaranteed for 1 year.

To validate your extended 4 year warranty*please register your purchase online within 28 days of the original purchase date by registering at:

help@electroluxsmalldomesticappliance.co.uk
or
Contact Us: www.electroluxsmalldomesticappliance.co.uk

*Your extended warranty is only valid with proof of purchase receipt and subject to the conditions outlined above.

Produced and imported under licence by
Eurosonic Group Limited
Brightgate House
1 Brightgate Way
Manchester M32 0TB UK
EU Rep: EuroSonic Magppie (ESM) Ltd. Ireland D05 X006
www.esgltd.com
ELECTROLUX is a pending or registered trademark used under license from AB Electrolux (publ)
Made in China